RC10 B6.3 TEAM KIT

Driver:	Kouki Kato	Event:	Race
Date:	19/06/2022	Track:	ChampStadium
Qualify:		TQ: ☐ Main:	Finish: Best Lap Time:

Reset Forms

Front Suspension:

Ride Height:	21mm
Camber:	1.0°
Toe:	1°
Anti-Roll Bar:	None
Arm Type:	Carbon Gull Wing
Tower Type:	Normal
Wheel Hex:	5.0mm
Steering Block:	Normal
Caster Block Insert:	2.5°
Bulkhead Type:	Aluminum
Kick-Up Angle:	25°
Notes:	All Titanium Turbuckle Set All Heavy-duty Titanium Ballstuds

Bump Steer Spacing: 0mm

Ball Stud Spacing: 1mm

Axle Height:
- +3 ☐
- +2 ☐
- +1 ■
- 0 ☐

Steering Plate: Normal

Steering Stop Spacing: 0mm

Ball Stud Spacing: 1mm

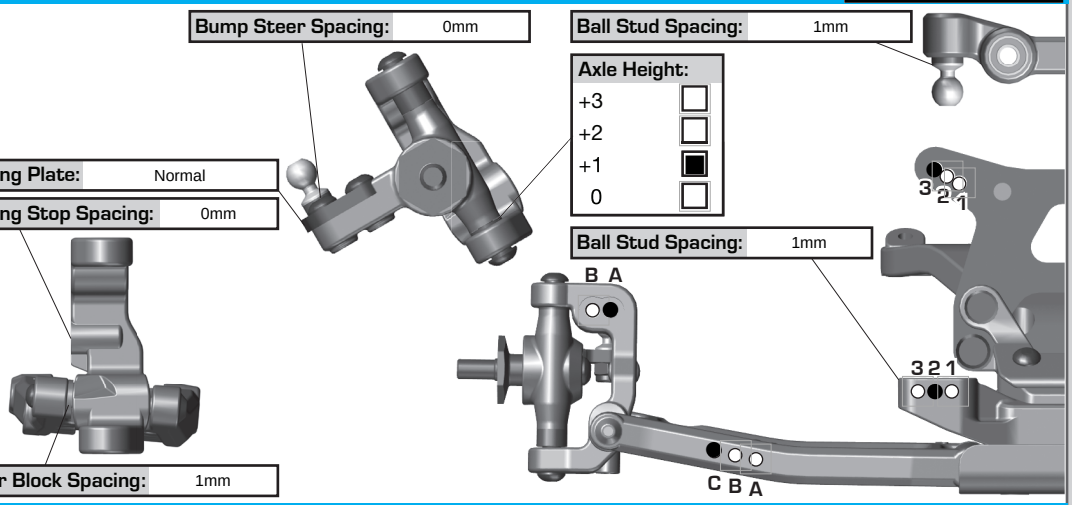

Caster Block Spacing: 1mm

Rear Suspension:

Ride Height:	22mm
Camber:	2.0°
Anti-Roll Bar:	None
Arm Type:	Normal 73mm
Tower Type:	Normal
Arm Spacing:	Arm forward
Wheel Hex:	5.0mm
Shock Mounting Position:	Front of Arm ■ Rear of Arm ☐
Hub Spacing:	Fwd ☐ Mid ■ Back ☐
CVA Bone Length:	69mm
CVA Axle Type:	+2mm
Notes:	All Titanium Turbuckle Set All Heavy-duty Titanium Ballstuds

C Mount: Aluminum ☐ Brass ■

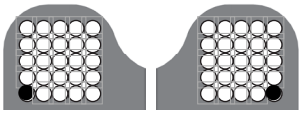

D Mount: Aluminum ■ Brass ☐

Axle Height:

	▼0	3▲	+3
	▼1	2▲	+2
	▲1	2▼	+1
	▲0	3▼	+0

Camber Link Spacing: 1mm

Ball Stud Spacing: 3mm

Ball Stud Spacing: 3mm

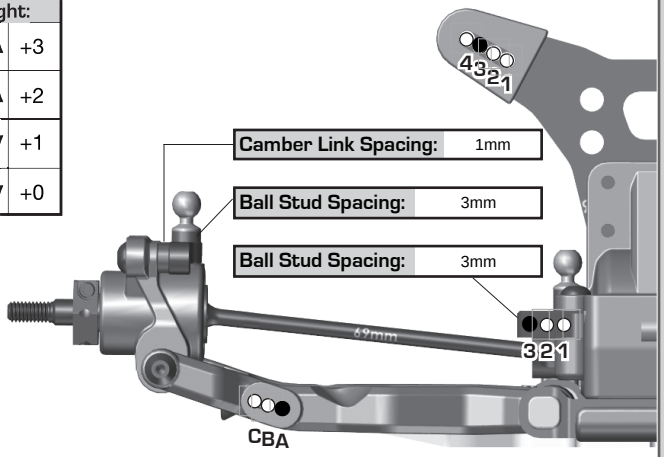

Electronics:

Radio:	M17	Servo:	PGS-LH II
EPA:	Throttle: 100 %	Brake:	96 %
ESC:	ORCA OE1		
ESC Settings:			
Motor:	ORCA MODTREME		
Wind:	7.5T	Timing:	20°
Pinion:	22T	Spur:	78T
Battery:	ORCA INFINITE X 4500mAh		
Battery Position:	5F		
Battery Weight:	None		

Drivetrain:

Transmission: Laydown: ■ Layback: ☐

Differential: Ball Diff: ■

Height: +2 Gear Diff: ☐

Gear Diff Mass:

Notes:

Slipper Clutch:

Type:	Normal
# of Pads:	Normal
Setting:	1.45mm

Shocks:

	Front	Rear
Piston:	#AS91626 1.6×2	#AS91627 1.7×2
Fluid:	AXON 35wt	AXON 35wt
Spring:	V2 Blue	V2 Blue
Limiters:	Int: 0 Ext: 0	Int: 0 Ext: 0
Stroke:	22.5mm	28.5mm
Eyelet Length:	Long	Long
Cup Offset:	5mm	5mm
Notes:		

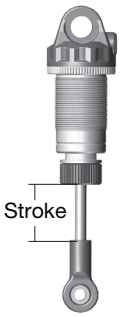

Track Info:

Size:	Small ☐	Medium ■	Large ☐	Extra Large ☐
Surface:	Dirt ■	Carpet ☐	Astroturf ☐	Multi Surface ☐
Traction:	Low ☐	Medium ■	High ☐	Very High ☐
Moisture:	Dry ■	Damp ☐	Wet ☐	
Condition:	Indoor ■	Outdoor ☐	Dusty ☐	Hard Packed ☐
	Bumpy ■	Grooved ☐	Smooth ☐	Loamy ☐
Temperature:	Ambient:	Track:		
Notes:				

Tires:

Front Tires:	Dirt Webs
Front Compound:	Silver
Front Insert:	Dirt Webs Normal
Rear Tires:	Ellipse
Rear Compound:	Silver
Rear Insert:	Ellipse Normal
Wheel (F/R):	Twork's Yellow
Notes:	

Body, Weight:

Body:	Jconcepts P2 Regular Weight
Front Wing:	Jconcepts B6.3 Front Wing
Rear Wing:	T-Wor's Astro-High-Clearance Rear Wing
Wing Angle:	0°
Chassis Length:	Normal
Servo Weights:	Carbon
Electronic Weights:	Carbon
Total Vehicle Weight:	1544g

Vehicle Comments: All SQUARE Titanium Screw,Tworks Wheel Nut,

:: For more setups, visit RC10.com and click on "Setup Sheets"